Pratissoli

VK

VK Series

Use and maintenance manual

INDEX

1. INTRODUCTION 4

2. DESCRIPTION OF SYMBOLS 4

3. SAFETY 5

3.1 General safety warnings....5
3.2 Essential safety in the high pressure system. 5
3.3 Safety during work....5
3.4 Rules of conduct for the use of lances. 5
3.5 Safety during system maintenance....6

4. PUMP IDENTIFICATION 6

5. TECHNICAL CHARACTERISTICS 7

6. DIMENSIONS AND WEIGHT 8

7. OPERATING INSTRUCTIONS 8

7.1 Water temperature....8
7.2 Maximum pressure and flow rate....8
7.3 Minimum rotating speed....9
7.4 Brands and types of oils recommended 9

8. PORTS AND CONNECTIONS 11

8.1 Linings / nose cones....11

9. PUMP INSTALLATION 12

9.1 Installation 12
9.2 Rotation direction 13
9.3 Version change 13
9.4 Hydraulic connections 14
9.5 Pump power supply 14
9.6 Suction line 14
9.7 Filtration 15
9.8 Outlet line 15
9.9 Calculation of the internal diameter of the duct pipes. 16
9.10 V-belt transmission 17
9.11 Transmission definition 18
9.12 Definition of static pull to apply on belts....19

10. START-UP AND OPERATION 21

10.1 Preliminary checks....21
10.2 Start-up 21
10.3 Seal pack cooling circuit....22

11. PREVENTIVE MAINTENANCE 22

12. PUMP STORAGE 23

12.1 Long-term inactivity 23
12.2 Method for filling pump with anti-corrosion emulsion or anti-freeze solution using an external diaphragm pump based on the layout shown in point 9.7 in fig. 8....23
12.3 Pipes....23

13. PRECAUTIONS AGAINST FROST 23

14. GUARANTEE CONDITIONS 23

15. OPERATING FAULTS AND THEIR POSSIBLE CAUSES 24

16. EXPLODED DRAWING AND PARTS LIST 25

1. INTRODUCTION

This manual describes the instructions for use and maintenance of the VK pump and should be carefully read and understood before using the pump.
Proper pump operation and duration depend on the correct use and maintenance.
Interpump Group disclaims any responsibility for damage caused by negligence or failure to observe with the standards described in this manual.
Upon receipt, verify that the pump is intact and complete.
Report any faults before installing and starting the pump.

2. DESCRIPTION OF SYMBOLS

Warning Sign

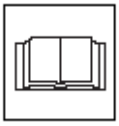

Read the contents of this manual carefully before each operation.

Danger sign
Danger of electrocution.

Danger sign
Wear a protective mask.

Danger sign
Wear protective goggles.

Danger sign
Put on protective gloves before each operation.

Danger sign
Wear appropriate footwear

3. SAFETY

3.1 General safety warnings

Improper use of pumps and high pressure systems as well as non-compliance with installation and maintenance standards can cause serious damage to people and/or property. Anyone assembling or using high pressure systems must possess the necessary competence to do so, knowing the characteristics of the components that will assemble/use and take all precautions necessary to ensure maximum safety in all operating conditions. In the interest of safety, both for the Installer and the Operator, no reasonably applicable precaution should be omitted.

3.2 Essential safety in the high pressure system.

1. The pressure line must always be provided with a safety valve.
2. High pressure system components, particularly for systems that operate primarily outside, must be adequately protected from rain, frost and heat.
3. The electrical control system must be adequately protected against sprays of water and must meet specific regulations in force.
4. The high pressure pipes must be properly sized for maximum operating pressure of the system and always and only used within the operating pressure range specified by the Manufacturer of the pipe itself. The same rules should be observed for all other auxiliary systems affected by high pressure.
5. The ends of high pressure pipes must be sheathed and secured in a solid structure, to prevent dangerous whiplash in case of bursting or broken connections.
6. Appropriate protective casing must be provided in pump transmission systems (couplings, pulleys and belts, auxiliary power outlets).

3.3 Safety during work.

The room or area within which the high pressure system operates must be clearly marked and prohibited to unauthorised personnel and, wherever possible, restricted or fenced.
Personnel authorised to access this area should first be instructed how to operate within this area and informed of the risks arising from high pressure system defects or malfunctions.
Before starting the system, the Operator is required to verify that:
1. The high pressure system is properly powered by a min. pressure of 5-7 Bar (Detected in the head flange).
2. The pump suction filters are perfectly clean; it is appropriate to include a device indicating the clogging level on all devices.
3. Electrical parts are adequately protected and in perfect condition.
4. The high pressure pipes do not show signs of abrasion and the fittings are in perfect order.

Any fault or reasonable doubt that may arise before or during operation should be promptly reported and verified by qualified personnel. In these cases, pressure should be immediately cleared and the high pressure system stopped.

3.4 Rules of conduct for the use of lances.

1. The Operator must always place his safety and security first, as well as that of others that may be directly affected by his/her actions, or any other assessments or interests. The Operator's work must be dictated by common sense and responsibility.

2. The Operator must always wear a helmet with a protective visor, waterproof gear and wear boots that are appropriate for use and can ensure a good grip on wet floors.

Note: appropriate clothing will protect against sprays of water but not from direct impact with jets of water or very close sprays. Additional protections may therefore be necessary in certain circumstances.

3. It is generally best to organise personnel into teams of at least two people capable of giving mutual and immediate assistance in case of necessity and of taking turns during long and demanding operations.
4. The work area jet range must be absolutely prohibited to and free from objects that, inadvertently under a pressure jet, can be damaged and/or create dangerous situations.
5. The water jet must always and only be pointed in the direction of the work area, including during preliminary tests or checks.
6. The Operator must always pay attention to the trajectory of debris removed by the water jet. Where necessary, suitable guards must be provided by the Operator to protect anything that could become accidentally exposed.
7. The operator should not be distracted for any reason during work. Workers needing to access the operating area must wait for the Operator to stop work on his/her own initiative, after which they should immediately make their presence known.
8. It is important for safety that all team members are always fully aware of each other's intentions in order to avoid dangerous misunderstandings.
9. The high pressure system must not be started up and run under pressure without all team members in position and without the Operator having already directed his/her lance toward the work area.

3.5 Safety during system maintenance

1. High pressure system maintenance must be carried out in the time intervals set by the manufacturer who is responsible for the whole group according to law.
2. Maintenance should always be performed by trained and authorised personnel.
3. Assembly and disassembly of the pump and the various components must only be carried out by authorised personnel, using appropriate equipment in order to prevent damage to components, in particular to connections.
4. Always only use original spare parts to ensure total reliability and safety.

4. PUMP IDENTIFICATION

Each pump has its own serial number XX.XXX.XXX, see point ① and a specification label see point ② of fig. 1 which shows:

Pump model and version
Max revs.
Absorbed power Hp – kW .
Flow rate l/min – Gpm.
Pressure bar – P.S.I.

Model, version and serial number must always be indicated when ordering spare parts

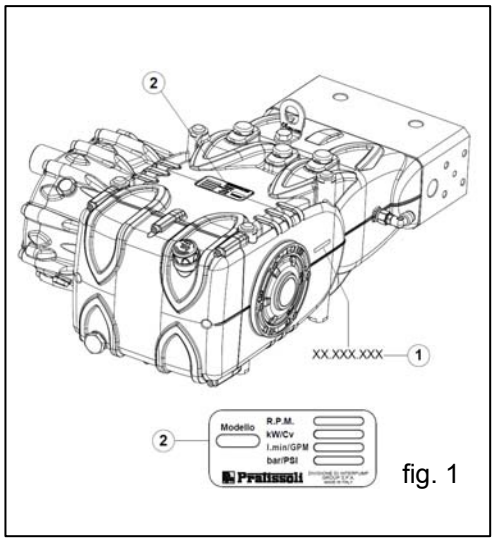

fig. 1

5. TECHNICAL CHARACTERISTICS

Model		Rpm/1'	Flow rate		Pressure		Power	
			l/min	Gpm	bar	psi	kW	Hp
VK12	Version without reduction gear	1200	20	5.30	1500	21750	57.2	77.9
	Version with reduction gear	1500						
		1800						
		2200						
VK 14	Version without reduction gear	1200	28	7.40	1100	15950	58.8	80
	Version with reduction gear	1500						
		1800						
		2200						

6. DIMENSIONS AND WEIGHT

For pump dimensions and weight of reduction gear unit Version, refer to fig. 2.
For pump dimensions and weight of Version without reduction gear unit, refer to fig. 2a.

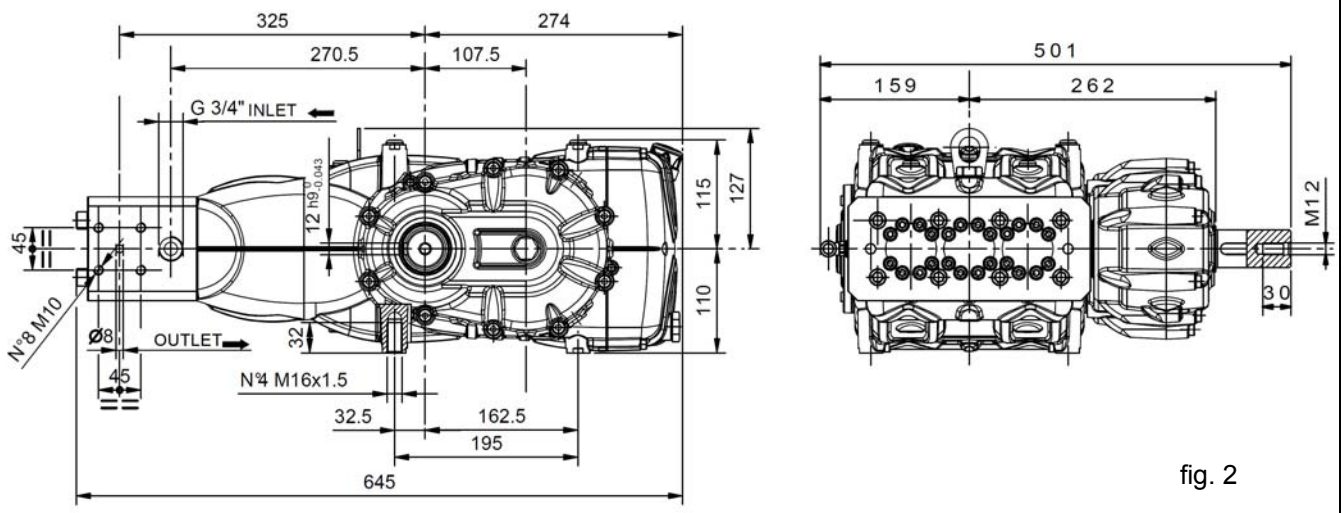

fig. 2

Dry weight 74 Kg

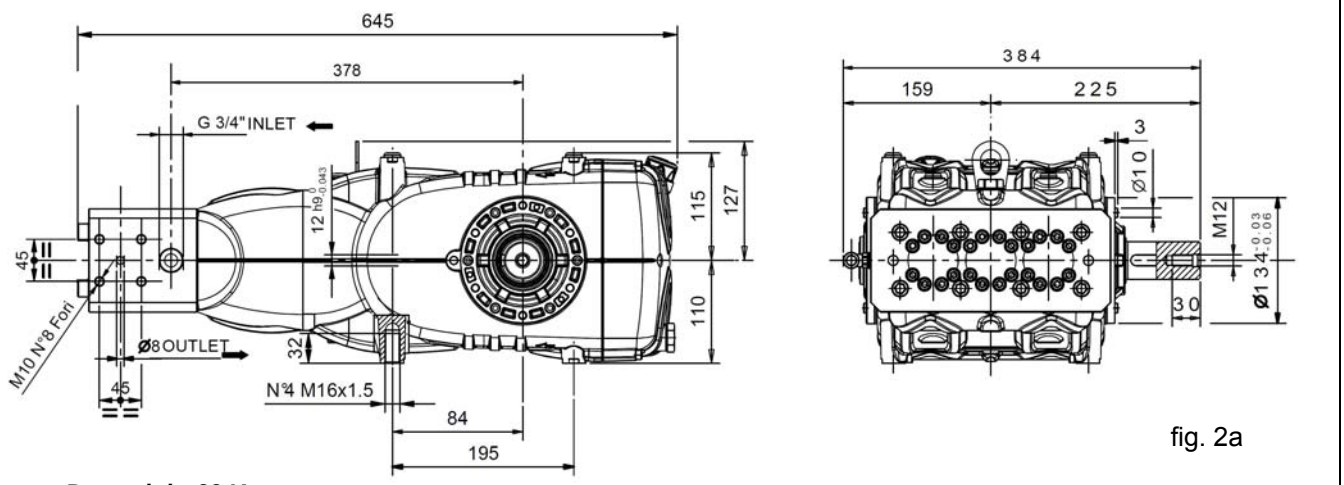

fig. 2a

Dry weight 60 Kg

7. OPERATING INSTRUCTIONS

The VK pump was designed to work with clean water (see section 9.7) and at room temperature. Other liquids can be used only after approval by the ***Technical or Customer Service Departments.***

7.1 Water temperature
The maximum permissible water temperature is 30C.**.**

7.2 Maximum pressure and flow rate
The rated specifications stated in our catalogue are the maximum that can be obtained from the pump. **Independently** of the power used, the maximum pressure and rpm indicated in the specification label can never be exceeded unless expressly authorised by our ***Technical or Customer Service Departments.***

7.3 Minimum rotating speed

Any rotating speed other than that indicated in the performance table (see chapter 5) must be expressly authorised by our ***Technical or Customer Service Departments.***

7.4 Brands and types of oils recommended

The pump is supplied with oil suitable for room temperatures from 0°C to 30°C.
some types of recommended oil are indicated in the table below, these oils have additives to increase corrosion resistance and fatigue resistance (DIN 51517 part 2).
Alternatively you can also use Automotive Gear SAE 85W-90 oil for gearing lubrication.

Hersteller Manufacturer Producteur	Schmieröl Lubricant Lubrifiant
Agip	AGIP ACER 220
ARAL	Aral Degol BG 220
BP	BP Energol HLP 220
Castrol	CASTROL HYSPIN VG 220, CASTROL MAGNA 220
DEA	Falcon CL 220

Hersteller Manufacturer Producteur	Schmieröl Lubricant Lubrifiant
elf	ELF POLYTELIS 220, REDUCTELF SP 220
Esso	NUTO 220, TERESSO 220
FINA	FINA CIRKAN 220
FUCHS	RENOLIN 212, RENOLIN DTA 220
Mobil	Mobil DTE Oil BB

Hersteller Manufacturer Producteur	Schmieröl Lubricant Lubrifiant
Shell	Shell Tellus Öl C 220
SRS	Wintershall Ersolan 220, Wintershall Wiolan CN 220
TEXACO	RANDO HD 220
TOTAL	TOTAL Cortis 220

Check the oil level, refill if necessary from the oil dipstick pos. ①, fig.3.
The correct checking of the oil level is made with the pump not running, at room temperature. The oil change must be made with the pump at working temperature, removing the plug pos.②, fig.3.

The oil check and change must be carried out as indicated in chapter 11.
The quantity required is:
~ 4.8 litres for versions with a reduction gear in positions 1 and 4 (fig. 6)
Said quantity will be slightly lower for positions 2 and 3.
~ 4.4 litres for versions without a reduction gear.

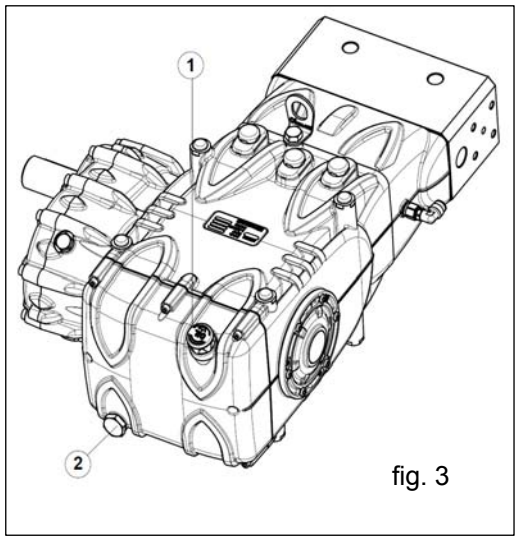

fig. 3

In any case the oil must be changed at least once a year, as it is degraded by oxidation.

For a room temperature other than between 0°C - 30°C, follow the instructions in the following diagram, considering that oil must have a minimum viscosity of 180 cSt.

Viscosity / Room temperature Diagram

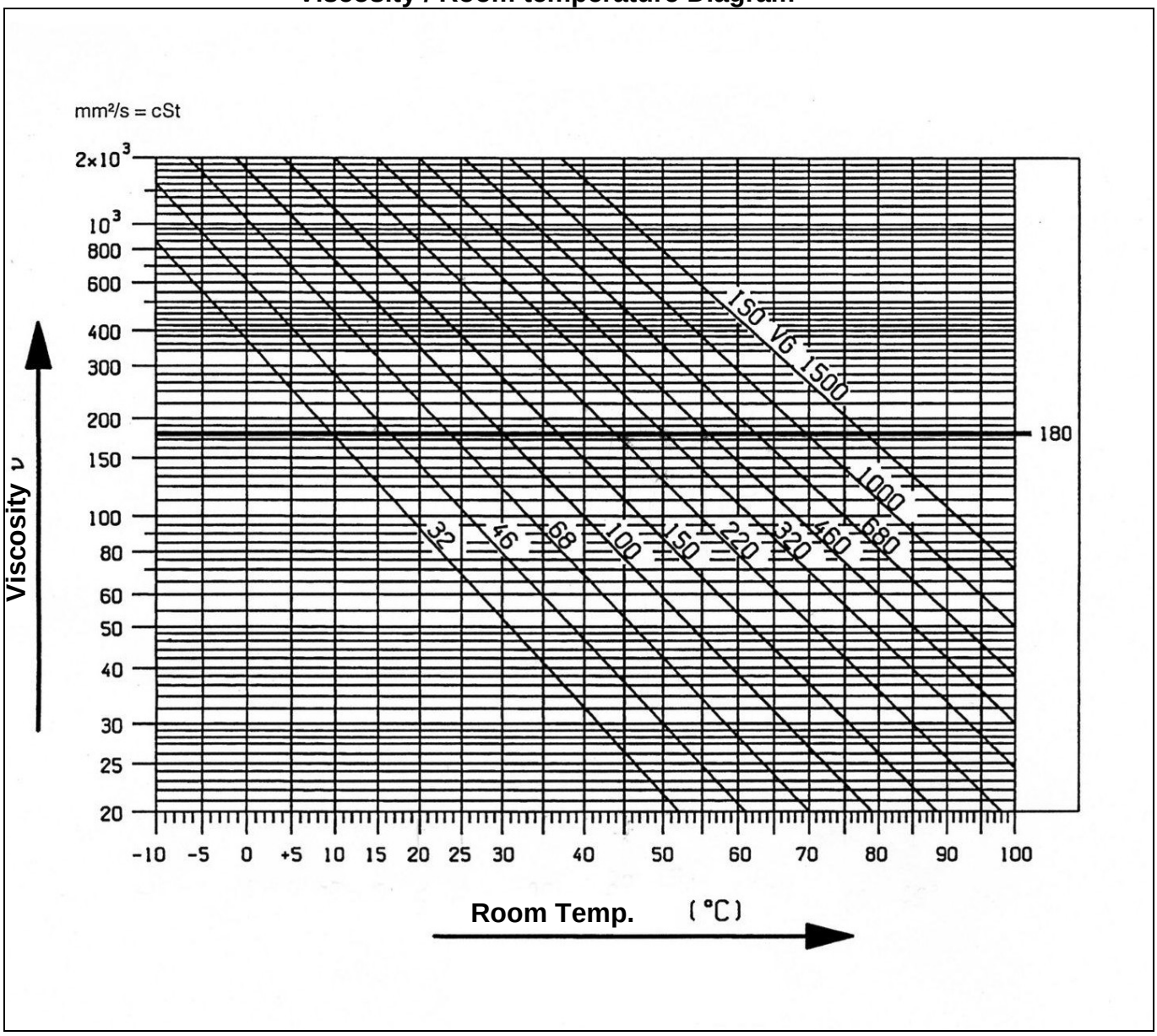

The oil must be placed in a suitable container and disposed of in special centres.
It absolutely should not be discarded into the environment.

8. PORTS AND CONNECTIONS

The VK series pumps, see figure 4, are equipped with:
① 2 “IN“ inlet ports 3/4” Gas .
Line connection to any of the two ports is indifferent for proper pump functioning.
The unused ports must be hermetically closed.
② 2 “OUT“ outlet ports with Ø 8 mm .
③ 2 service ports of 1/2” Gas, these can be used for the pressure gauge and the safety valve.
④ 1 “DRAIN “ port supplied with a 90° adjustable quick coupling for polyamide pipes with Ø e 10 mm.
These serve to recover drainage of the seal pack cooling circuit and must be connected to the discharge, making sure that there is no back pressure.

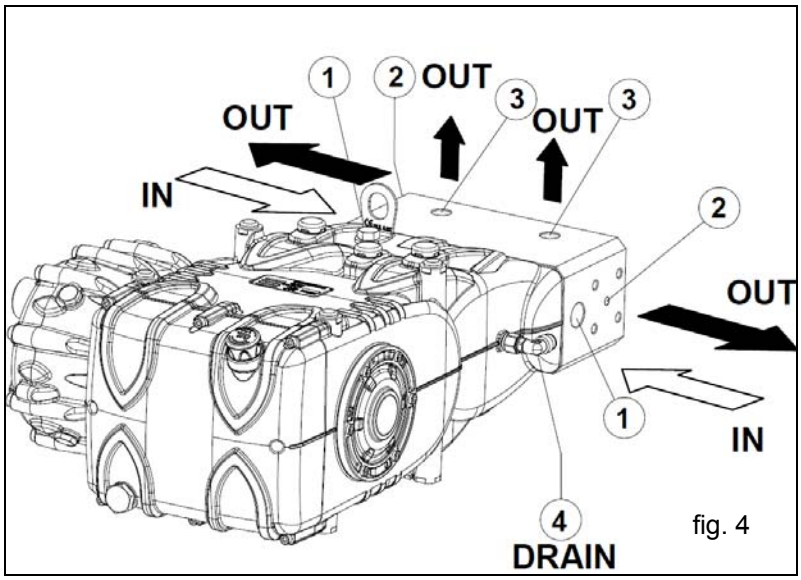

fig. 4

8.1 Linings / nose cones

The VK pumps are supplied with 4 steel tapered linings to be used in the corresponding pump outlet ports (see fig. 5) or in the optional fitting flanges, with the function of ensuring connection sealing. While the pump outlet port housing is already processed for holding the tapered lining, whenever outlet fitting or closing plug attachment is necessary, these will have to be processed as indicated in fig. 5/a.

The tapered linings must be replaced at each disassembly.

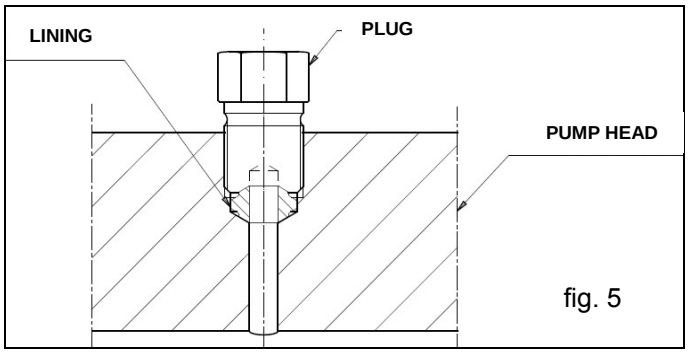

fig. 5

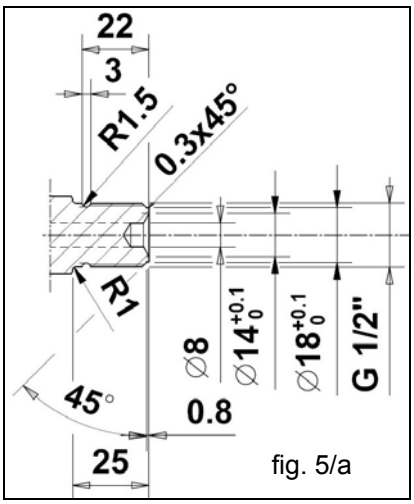

fig. 5/a

9. PUMP INSTALLATION

9.1 Installation
The pump must be fixed horizontally using the M16x1.5 threaded support feet.
Tighten the screws with a torque of 210 Nm.
The base must be perfectly flat and rigid enough as not to allow bending or misalignment on the pump coupling axis/transmission due to torque transmitted during operation.
The unit cannot be fixed rigidly to the floor but must interposed with vibration dampers.
For special applications contact the ***Technical or Customer Service Departments.***

A lifting bracket is mounted on the pump for easy installation, as per the figure below.

Replace the oil filling hole closing service plug (red) positioned on the rear casing cover.
Check the correct quantity with the oil dipstick.
The oil dipstick must always be reachable, even when the unit is assembled.

The pump shaft (PTO) should not be rigidly connected to the propulsor unit
The following types of transmission are recommended:

- Flexible joint
- Cardan-shaft (comply with manufacturer's Max. recommended working angles)
- V-belts, only allowed on versions without a reduction gear

9.2 Rotation direction
The pump rotation direction is indicated by an arrow located on the casing.
From a position facing the pump head, the rotation direction of the drive shaft will be
- as per fig. 6 for versions with a reduction gear
- as per fig. 6a for versions without a reduction gear.

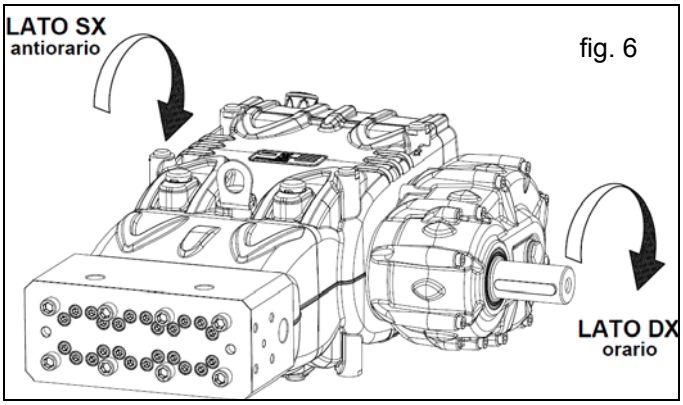

fig. 6

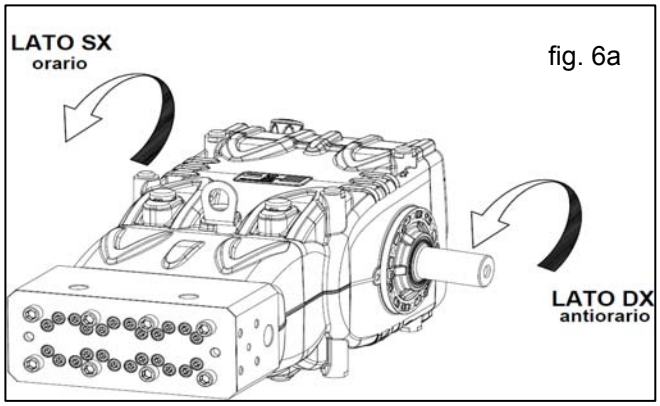

fig. 6a

9.3 Version change
The pump version is defined as right when:
Observing the pump facing the head side, the pump shaft must have a PTO shank on the right side.
The pump version is defined as left when:
Observing the pump facing the head side, the pump shaft must have a PTO shank on the left side.
Note. The versions shown in fig. 6 and 6a are right.

The version can only be modified by trained and authorised personnel and carefully following the instructions below:

1. Separate the hydraulic part from the mechanical part as indicated in point 2.2.1 of the repair manual.
2. Turn the mechanical part 180° and reposition the rear casing cover in such a way that the oil dipstick is turned upward. Reposition the lifting bracket and relative hole closing plugs in the upper part of the casing. Finally, properly reposition the specification label in its housing on the casing.

Make sure that the lower casing draining holes in correspondence with the pistons are open and not closed from the plastic plugs provided for the previous version .

3. Separate the hydraulic part from the mechanical part as indicated in point 2.2.2 of the repair manual.

It is also possible to place the reduction gear in 4 different positions as per fig.7.

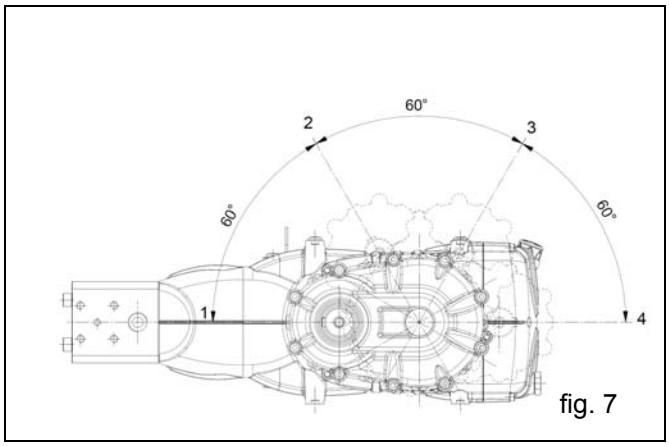

fig. 7

The reduction gear position can only be modified by trained and authorised personnel carefully following directions contained in the repair manual.

9.4 Hydraulic connections
In order to isolate the system from vibrations produced by the pump, it is advisable to make the first section of the duct adjacent to the pump (both suction and outlet) with flexible piping. The consistency of the suction section must be such as to prevent deformations caused by vacuums produced by the pump.

9.5 Pump power supply
VF pumps require a positive head ($NPSH_r$) between 5 and 7 bar detected at the head inlet.
The booster supply pump must have the following characteristics:
flow rate that is at least double the nominal flow rate of the plunger pump with minimum pressure of 5 bar
These supply conditions must be respected at any operating rpm. Activation of the booster pump must be independent from activation of the plunger pump.

Booster pump start-up must always come before start-up of the piston pump .
Installing a pressure regulator downstream from the pump protection filters on the power supply line is recommended.

9.6 Suction line
For a smooth operation of the pump, the suction line should have the following characteristics:

1. Minimum internal diameter as indicated in the graph at point 9.9 and equal to or exceeding that of the pump head.

Localised restrictions should be avoided along the run of the duct, as these can cause load losses resulting in cavitation. Avoid 90° elbow bends, connections with other piping, constrictions, counterslopes, inverted U-curves and T-connections.

2. With a layout that is set in such a way to prevent cavitation.
3. Completely airtight and constructed to ensure sealing over time.
4. Prevents that pump stopping causes emptying, even partial.
5. Do not use 3 or 4-way hydraulic fittings, adapters, swivel joints, etc. as they could jeopardise pump performance.
6. Do not install Venturi tubes or injectors for detergent suction.
7. Avoid use of base valves or other types of unidirectional valves.
8. Do not recirculate by-pass valve discharge directly into suction.
9. Provide for proper guards inside the tank to prevent that water flow from the bypass and the tank supply line can create vortexes or turbulence near the pump supply pipe port.
10. Make sure the suction line is thoroughly clean inside before connecting it to the pump.
11. Install the pressure gauge to control booster pressure near the plunger pump suction port and always downstream from the filters.

9.7 Filtration

Filtration allowed for this series of pumps must be max. 20 μ (micron), normally obtained through a battery of at least three filters, positioned as shown in fig. 8.

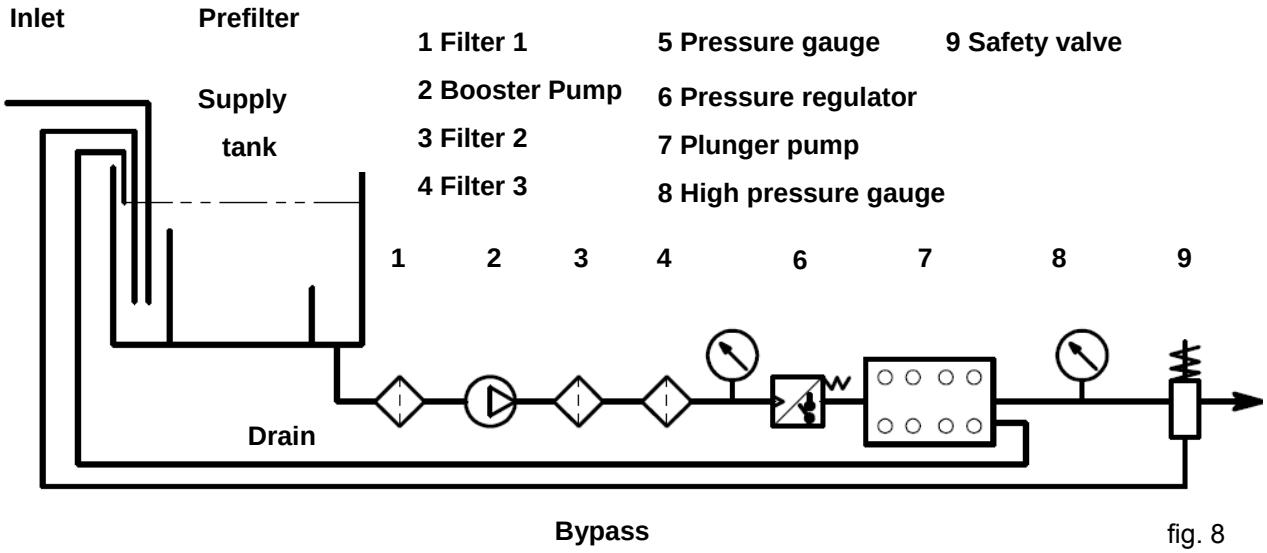

fig. 8

The filters must be installed as close as possible to the pump and must be easy to inspect and must have the following characteristics:

1. Minimum flow rate at least 3 times the nominal flow rate of the pump.
2. Inlet/outlet port diameters no smaller than the inlet port diameter of the pump.
3. Filtration degree :

   Filter 1: 250 μ
   Filter 2: 100 μ
   Filter 3 20 μ

For smooth pump operation, regular filter cleaning is necessary, planned according to the actual use of the pump in relation to the quality of water used and actual clogging conditions.

Provide a pressure regulator to ensure the required supply pressure (see section 9.5)

9.8 Outlet line

For the correct laying of the outlet line, the following installation rules must be followed:

1. The internal diameter of the pipe must be sufficient to ensure correct fluid velocity, see graph at point 9.9.
2. The first section of the line connected to the pump outlet must be a flexible hose, in order to isolate the vibrations produced by the pump of the rest of the system.
3. Use high pressure pipes and fittings to ensure high safety margins in all operating conditions.
4. The outlet line must always be provided with a Max. pressure valve.
5. Use pressure gauges suitable to withstand pulsating loads typical of the plunger pumps.
6. During the design stage, keep in mind the line load losses which result in a drop in pressure during use with respect to the pressure measured on the pump.
7. For those applications where pulses produced by the pump on the outlet line may prove harmful or unwanted, install a pulsation dampener of sufficient size.

9.9 Calculation of the internal diameter of the duct pipes.
To determine the internal diameter of the duct, refer to the following diagram:

Suction duct
With a flow rate of ~ 20 L/min and a water velocity of 0.5 m/sec. The graph line joining the two scales meets the central scale showing the diameters, corresponding to a value of ~ 28 mm.

Outlet duct
With a flow rate of ~ 20 L/min and a water velocity of 5.5 m/sec. The graph line joining the two scales meets the central scale showing the diameters, corresponding to a value of ~ 8.5 mm.

Optimal speed to be obtained with the Booster pump:
- Suction: ≤ 0.5 m/sec.
- Outlet: ≤ 5.5 m/sec.

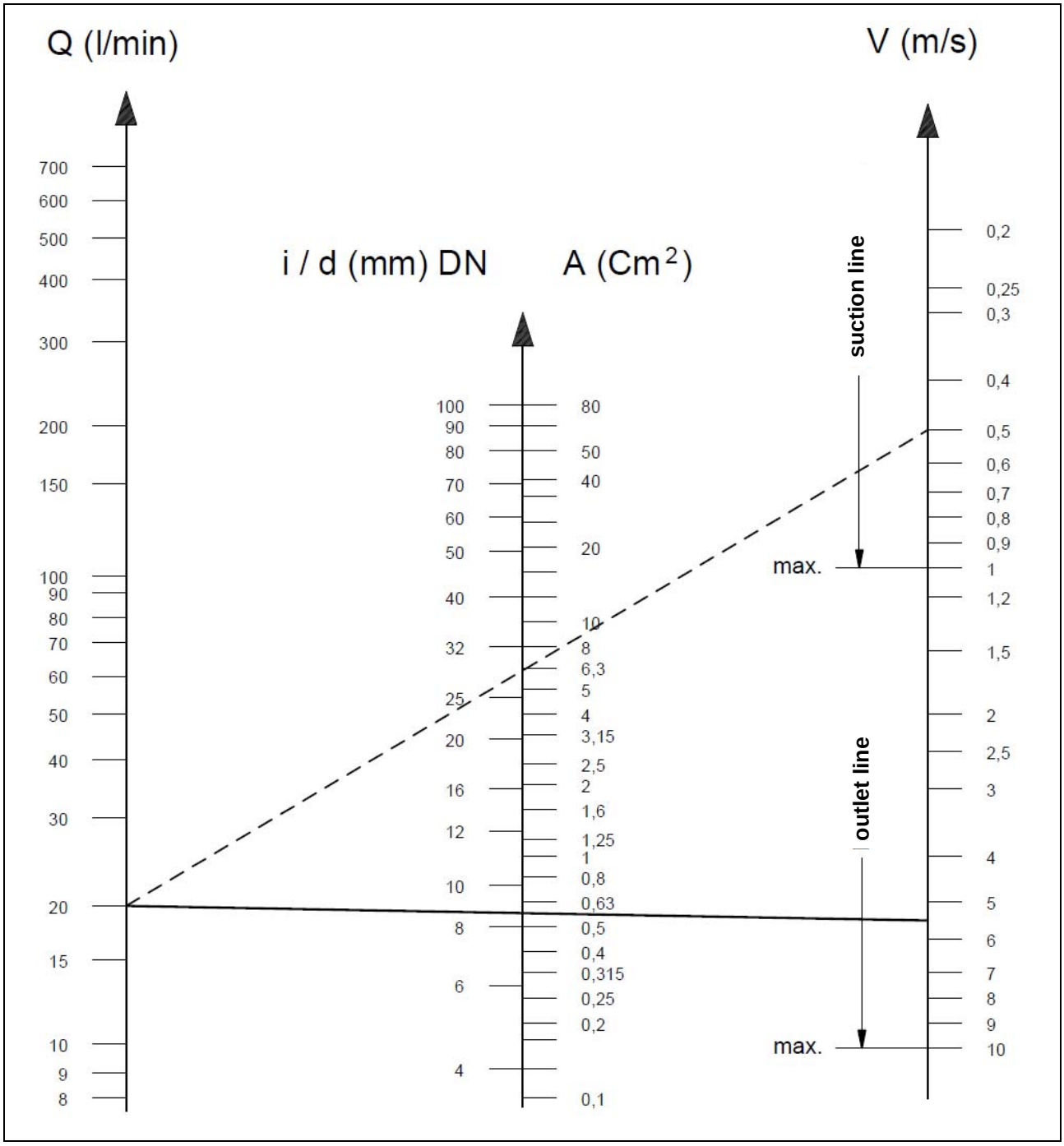

The graph does not take into account pipe resistance, valves, load loss produced by the length of the ducts, the viscosity of the liquid pumped or the temperature itself.
If necessary, contact our ***Technical or Customer Service Departments***.

9.10 V-belt transmission

V-belt transmission is only allowed on versions without a reduction gear.

For this pump model, we recommend use of 4 XPB belts (16.5x13 serrated). Use an XPC profile only for long durations. Both the characteristics and transmissible power of each belt can be verified in the diagram in fig. 9, in relation to the number of rpm normally declared by the manufacturer.
Minimum duct pulley diameter (on pump shaft) : ≥ 250 mm .
The radial load on the shaft must not exceed 7,500 N (value necessary for Layout definition).
The transmission is considered adequate if the load is applied to a maximum distance **a=40 mm** from the shaft shoulder (P.T.O) as shown in fig. 12.

For dimensions differing from those specified above, contact our ***Technical or Customer Service Departments.***

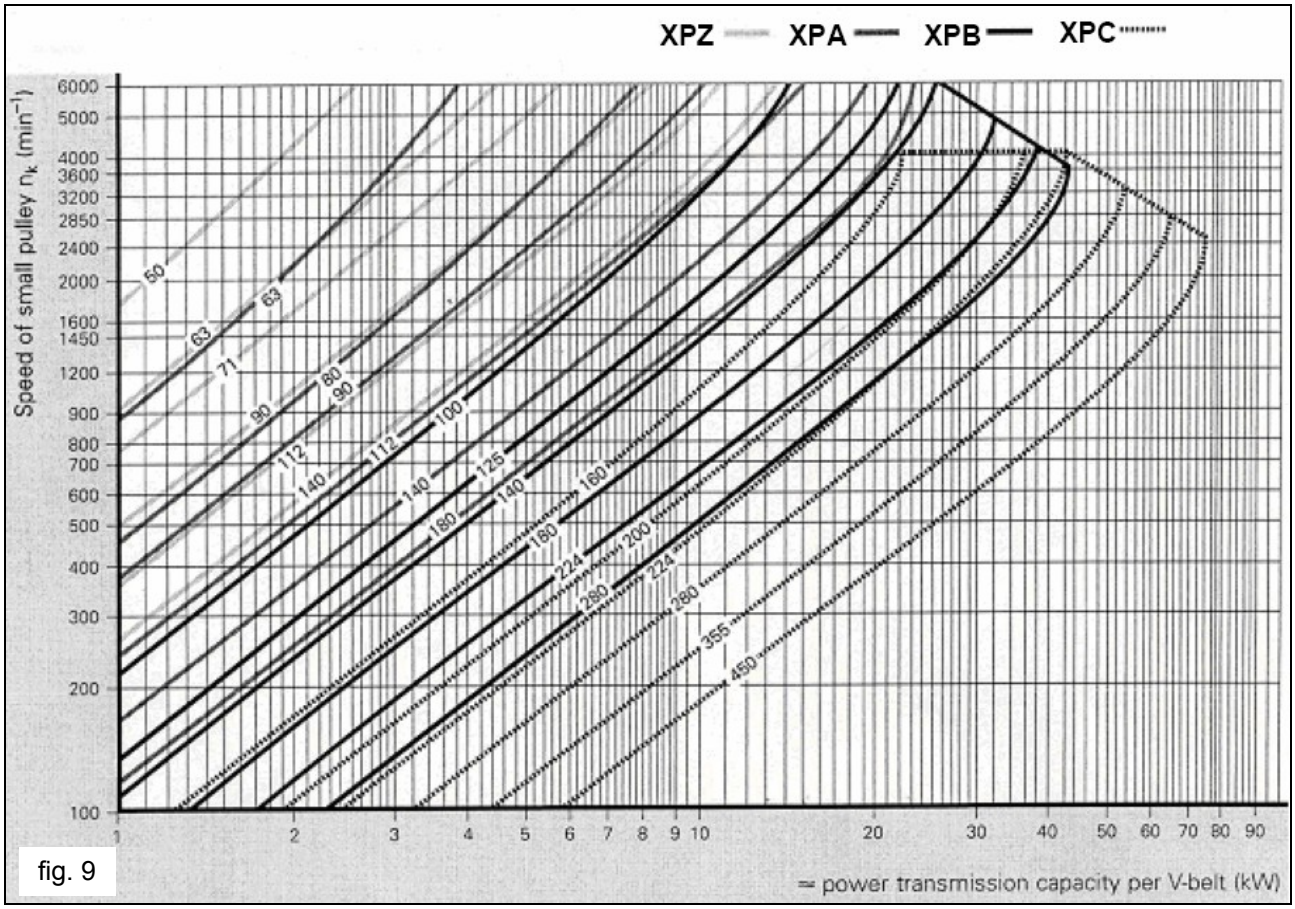

fig. 9

9.11 Transmission definition

To prevent irregular radial loads on the shaft and the relative bearing, follow these directions:

a) Use pulleys with v-belts with the size of the groove required/recommended by the manufacturer of belt used. In the absence of directions, follow fig.10 and the table in fig.11.

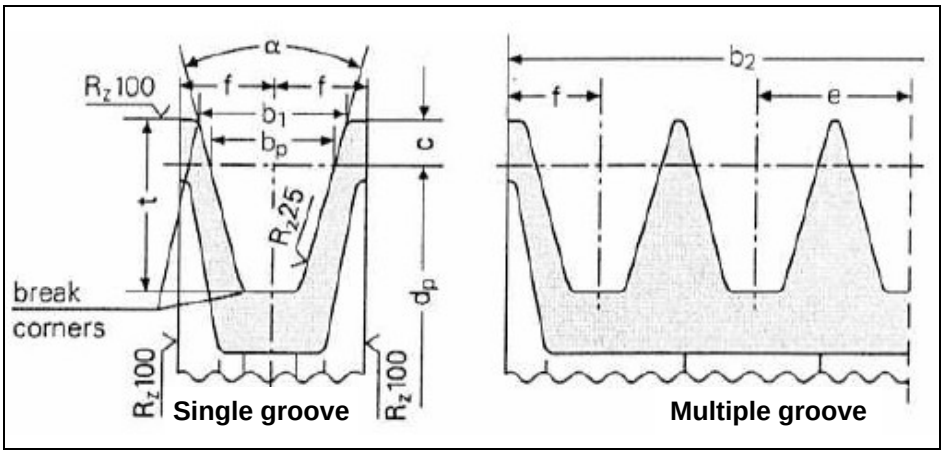

fig. 10

Dimensions (in mm)

Belt section as per DIN 7753 part 1 and B.S. 3790		DIN symbol symbol B.S./ISO	XPB/SPB SPB	XPC/SPC SPC
Belt section as per DIN 2215 and B.S. 3790		DIN symbol symbol B.S./ISO	17 B	22 C
Pitch width		b_w	14.0	19.0
Increased grooving width b_1 ≈		α = 34°	18.9	26.3
		α = 38°	19.5	27.3
		c	8.0	12.0
Distance between grooving		e	23 ± 0.4	31 ± 0.5
		f	14.5 ± 0.8	20.0 ± 1.0
Increased grooving depth		t_{min}	22.5	31.5
α	34°	by primitive diameter narrow-section v-belts DIN 7753 part 1 d_w	from 140 to 190	from 224 to 315
	38°		> 190	> 315
α	34°	by primitive diameter classic section v-belts DIN 2215 d_w	from 112 to 190	from 180 to 315
	38°		> 190	> 315
Tolerance for α = 34°-38°			± 1°	± 30’
Pulleys for b2 by grooving number z b2 = (z-1) e + 2 f		1	29	40
		2	52	71
		3	75	102
		4	98	133
		5	121	164
		6	144	195
		7	167	226
		8	190	257
		9	213	288
		10	236	319
		11	259	350
		12	282	381

Minimum pulley diameter must be respected.
Do not use laminated v-belts.

fig. 11

b) Use high performance belts – for example **XPB** instead of **SPB** – as a lower quantity of belts for the same transmitted power may be necessary and a consequent shorter resulting distance compared to the shaft shoulder (P.T.O), "a" in fig. 12.

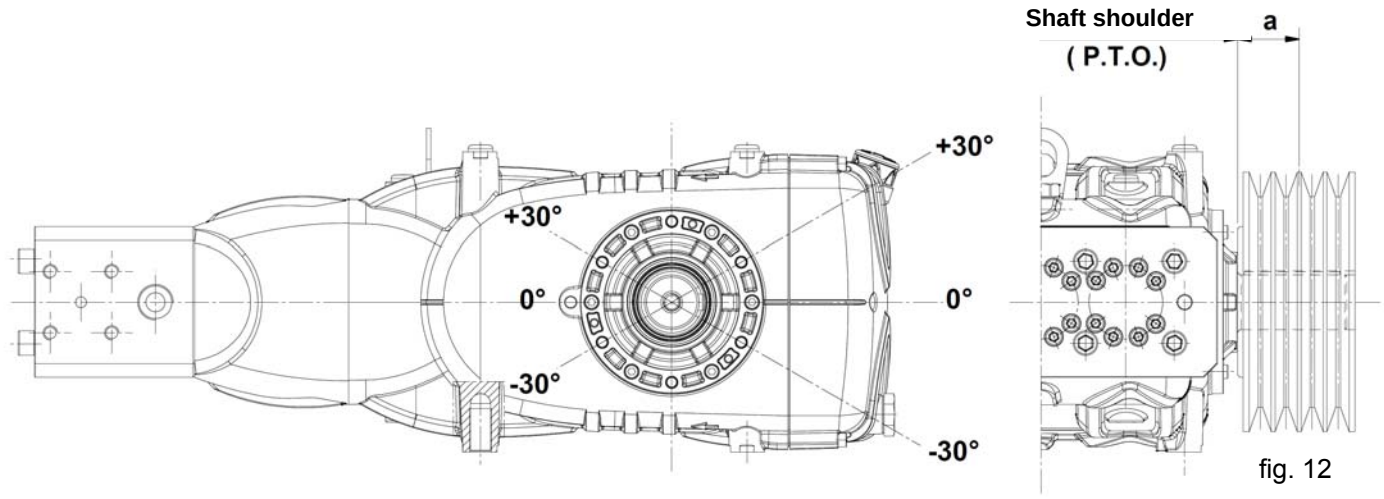

fig. 12

c) Pull the belts according to manufacturer instructions. Excessive pulling can cause reduced bearing life and wear out the pulley prematurely. Pulling depends on different variables as indicated in point 9.12.
d) Belt length has a natural tolerance ≥ ± 0.75%. For this reason, the three belts must be purchased as a pair.
e) Follow the direction of the belt pull as shown in fig. 12; for other needs, contact our ***Technical or Customer Service Departments.***
f) Take care of the alignment of the driving pulley and driven pulley grooves.

9.12 Definition of static pull to apply on belts
Static pull depends on:

a) The wheelbase between the two pulleys (belt length)
b) The load due to static pull of the belt
c) The number of belts
d) The winding angle of the smallest pulley
e) Average speed
f) Etc.

Values of the static pull to be applied can be obtained from the diagram in fig. 13 for belts with a XPB profile in relation to the wheelbase.

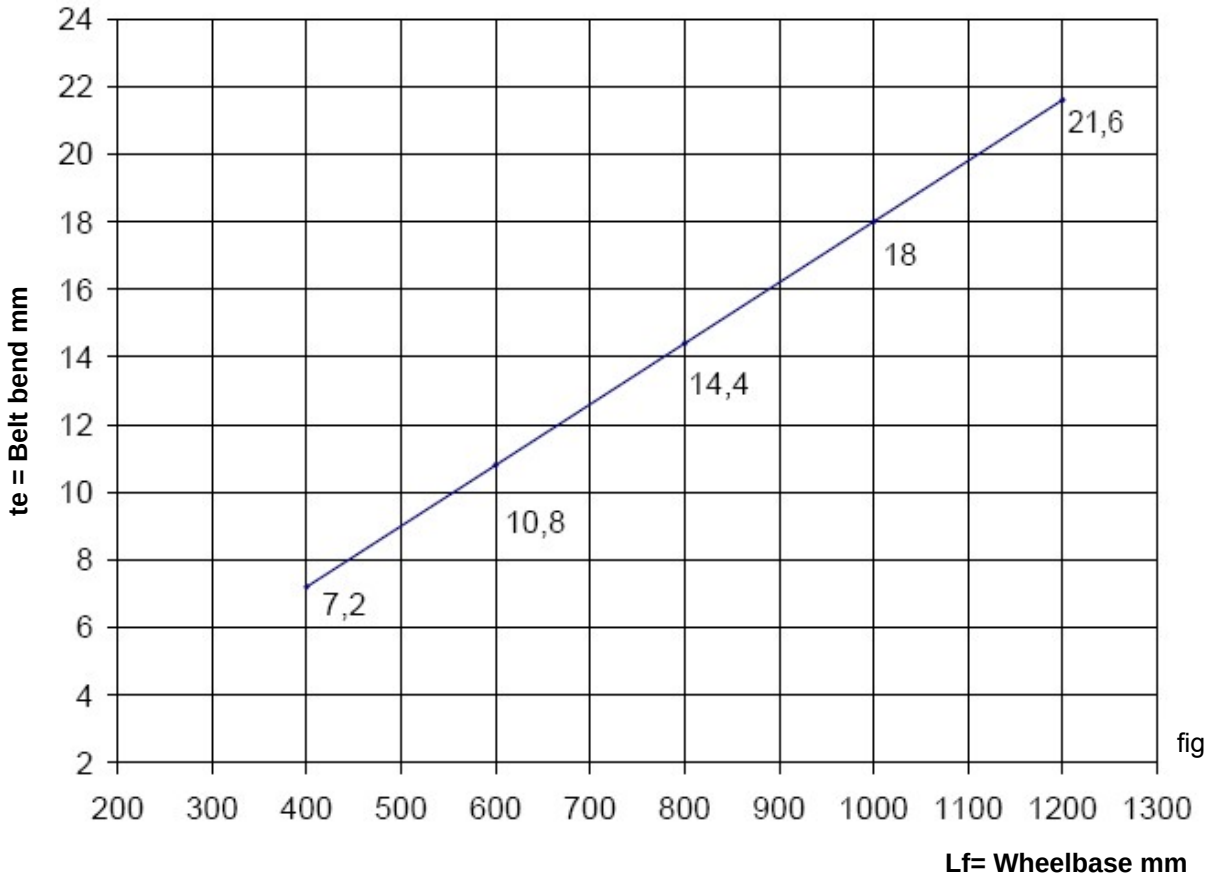

fig. 13

Conclusion : with a dynamometer, loading the belt branch with 75 N as indicated in fig 14, a "te" bend of approximately 10.8 mm is obtained.

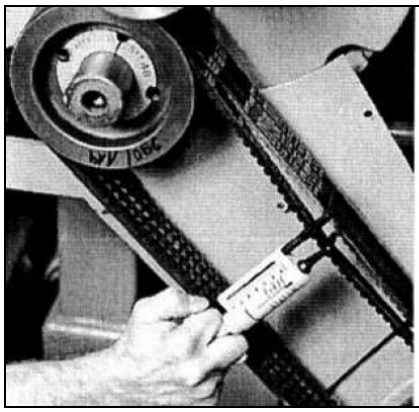

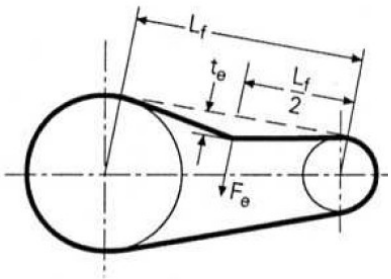

Lf = wheelbase

te= Belt bend

Fe = 75 N Dynamometer load

fig. 14

Note$_1$. Unless otherwise stated by the supplier of the belts, control of proper pull and its relative re-tensioning should be performed after no less than 30 minutes of motion necessary for the normal adjustment of the belts. Best performance and durability will be achieved with proper tensioning.

Note$_2$. In case of necessity or for routine maintenance, never replace a single belt but the complete set.

10. START-UP AND OPERATION

10.1 Preliminary checks
Before start-up, ensure that:

The suction line is connected and pressurised (see Point 9.4 – 9.5 – 9.6) the pump must never run dry.

1. The suction line ensures a hermetic seal over time.
2. Any shut-off valves between the supply source and the pump are fully open. The outlet line during is free discharge, to permit air present in the pump head to come out quickly and therefore favour fast priming.
3. All suction and outlet fittings and connections are properly tightened.
4. The coupling tolerances on the pump/transmission axis (half-joint misalignment, Cardan joint tilt, belt pulling, etc.) remain within limits required by the transmission manufacturer.
5. Oil in the pump casing is at level, verified with a dipstick (position 1 fig. 15) and exceptionally with a level indicator (position 2 fig. 15).

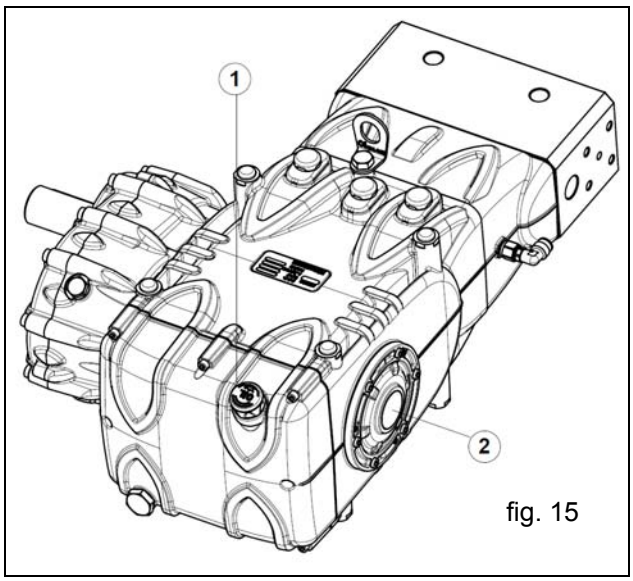

fig. 15

In case of prolonged storage or long-term inactivity, check proper functioning of the suction and outlet valves.

10.2 Start-up
1. At first start-up, verify that the rotation direction and the supply pressure are correct.
2. Start-up the pump without any load.
3. Check that the supply pressure is correct.
4. Check that the rotation rpm during operation does not exceed the nominal rpm of the pump.
5. Let the pump run for a period of no less than 3 minutes, before putting it under pressure.
6. Before each pump stop, reset pressure by means of the control valve or with any relieving devices and reduce to a minimum rpm.
   (activation with combustion motors).

10.3 Seal pack cooling circuit
During operation, a desired quantity of water from the seal pack cooling circuit will come out of orifice 4. Drainage of this circuit must be made to reflow to the suction line upstream of the booster pump (fig. 16), or else into the collection tank.

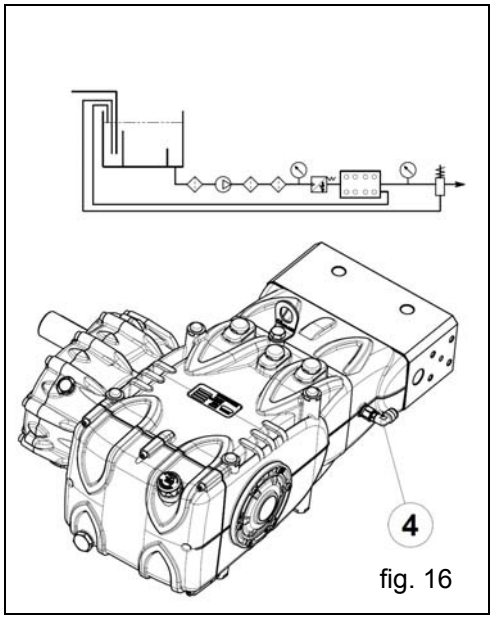

fig. 16

11. PREVENTIVE MAINTENANCE
For pump reliability and efficiency, comply with maintenance intervals as shown in the table below.

PREVENTIVE MAINTENANCE	
Every 500 hours	**Every 1000 hours**
Check oil level	Change oil
	Check / Replace : Valves Valve housings Valve springs
	Check / Replace : H.P. seals L.P. seals

fig. 17

12. PUMP STORAGE

12.1 Long-term inactivity

If the pump is started for the first time after a long period from the date of shipment, before operation check the oil level, inspect the valves as specified in chapter 10, then follow described start-up procedures.

12.2 Method for filling pump with anti-corrosion emulsion or anti-freeze solution using an external diaphragm pump based on the layout shown in point 9.7 in fig. 8

a) Close the filter drainage, if open.
b) Make sure the connecting pipe is clean, spread with grease and connect them to the high pressure discharge.
c) Fix the suction pipe to the diaphragm pump, open the pump suction connection and attach the pipe between it and the diaphragm pump.
d) Fill the container with solution / emulsion.
e) Put the free ends of the suction pipe and the high pressure exhaust pipe inside the container.
f) Switch on the diaphragm pump.
g) Pump the emulsion until it exits from the high pressure exhaust pipe.
h) Continue pumping for at least another minute. The emulsion can be reinforced if necessary by adding Shell Donax for example to the solution.
i) Stop the pump, remove the pipe from the suction connection and close with a plug.
j) Remove the hose from the high pressure exhaust. Clean and grease and plug both pipe connections.

12.3 Pipes

a) Before greasing and protecting pipes according to previously described procedure, dry connections with compressed air.
b) Cover with polyethylene.
c) Do not wind too tight, ensure that there are no folds.

13. PRECAUTIONS AGAINST FROST

Follow the instructions in Chapter 12 in areas and times of the year at risk of frost (see point 12.2).

In the presence of ice, do not run the pump for any reason until the circuit has not been fully defrosted, in order to avoid serious damage to the pump..

14. GUARANTEE CONDITIONS

Pumps are guaranteed for a period of 12 months from the date of supply or else for 1,000 hours of work.
Refer to the terms of the contract for other guarantee conditions.
The guarantee will be invalidated if:

a) The pump is used for purposes other than for those agreed upon.
b) The pump is fitted with an electric or combustion motor with performance exceeding those indicated in the table.
c) Safety devices are decalibrated or disconnected.
d) The pump is used with accessories or parts not supplied by Interpump Group.
e) Damage has been caused by:
    1) improper use
    2) failure to follow maintenance instructions
    3) any use different from that described in the operating instructions
    4) insufficient flow rate
    5) defective installation
    6) improper positioning or sizing of pipes
    7) unauthorised plan modifications
    8) cavitation

15. OPERATING FAULTS AND THEIR POSSIBLE CAUSES

The pump does not produce any noise upon start-up:
- The pump is not primed and is running dry.
- No suction water.
- Valves are blocked.
- The outlet line during is closed and does not allow air present in the pump head to come out.

The pump pulsates irregularly:
- Air suction.
- Insufficient supply.
- Bends, elbow bends, fittings along the suction line are choking the passage of liquid.
- The suction filter is dirty or too small.
- The booster pump, where installed, is supplying insufficient pressure or flow rate.
- The pump is not primed for insufficient head or the outlet is closed during priming.
- The pump is not primed for the fixing of some valves.
- Worn valves.
- Worn pressure seals.
- Imperfect functioning of the pressure control valve.
- Problems on the transmission.

The pump does not supply the nominal flow rate/excessive noise:
- Insufficient supply (see various causes as above).
- The number of rpms is less than the nominal rate.
- Excessive leakage of the pressure control valve.
- Worn valves.
- Excessive leakage of the pressure seals.
- Cavitation due to:
  1) Improper sizing of suction ducts/undersized diameters.
  2) Insufficient flow rate.
  3) Elevated water temperature.

The pressure supplied by the pump is insufficient:
- Use (nozzle) is or has become higher than the capacity of the pump.
- The number of rpms is insufficient.
- Excessive leakage of the pressure seals.
- Imperfect functioning of the pressure control valve.
- Worn valves.

The pump is overheated:
- The pump is working in pressure excess or the number of rpms is higher than the nominal rate.
- Oil in the pump casing is not at level or not the recommended type as detailed in chapter 7 (see point 7.4).
- Joint or pulley alignment is incorrect.
- Excessive pump tilt during operation.

Vibrations and shock to pipes:
- Air suction.
- Imperfect functioning of the pressure control valve.
- Valve malfunction.
- Non-uniformity in the transmission motion.

16. EXPLODED DRAWING AND PARTS LIST

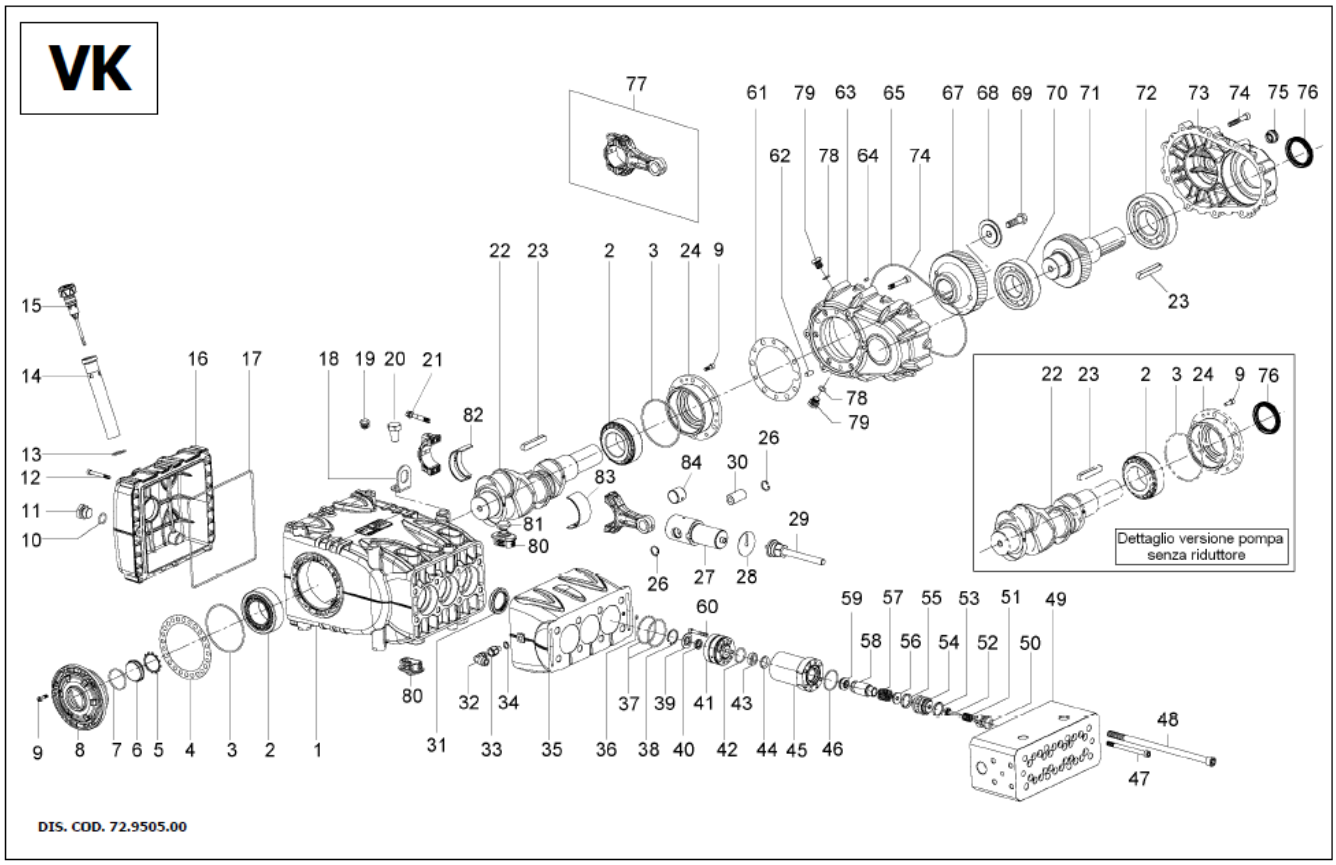

	KIT RICAMBIO – SPARE KIT	VK12	VK14
A	Kit tenute pompanti – Plunger packing kit	KIT 2037	KIT 2035
B	Kit tenute valvole – Valve seals kit	KIT 2038	
C	Kit tenute complete – Complete seals kit	KIT 2128	KIT 2129
D	Kit valvole aspiraz/mandata – suction + outlet valves kit	KIT 2110	KIT 2130
E	Kit bronzine bielle – Conrod bushing kit	KIT 2135 – 2154 - 2155	

Pratissoli

VK12 – VK14

POS	CODE CODICE	DESCRIPTION DESCRIZIONE	KIT	NR. PCS
1	71.0100.22	Carter pompa		1
2	91.8590.00	Cuscinetto a rulli conici 50x90x32 - 33210/Q		2
3	90.3918.00	OR Ø 94,92x2,62 (3375)	C	2
4	71.2200.81	Spessore di rasamento 0.1 mm		1
	71.2203.81	Spessore di rasamento 0.25 mm		1
	71.2205.81	Spessore di rasamento 0.35 mm.		1
5	90.0756.00	Anello ZJ45		1
6	70.2118.01	Spia livello olio		1
7	90.3877.00	OR Ø 39,34x2,62 (3156)	C	1
8	71.1501.22	Coperchio cuscinetto lato spia		1
9	99.1867.00	Vite M6x18 UNI 5931		12
10	90.3841.00	OR Ø 17,13x2,62 (3068)	C	1
11	98.2183.00	Tappo G 1/2"x13 - NICKEL		1
12	99.1968.00	Vite M6x50 UNI 5931		8
13	90.3604.00	OR Ø 25,12x1,78 (2100)		1
14	72.2106.95	Tubo per asta livello olio		1
15	98.2120.00	Tappo con asta Ø 21.5x91		1
16	72.1600.22	Coperchio posteriore		1
17	90.4000.00	OR Ø 215x3 (11BI08)	C	1
18	71.2230.74	Staffa di sollevamento		1
19	98.2060.00	Tappo per foro Ø 15 - TTN18		7
20	99.4266.00	Vite M12x25 UNI 5739		1
21	99.3138.00	Vite serraggio biella M8x1x48		6
22	71.0200.35	Albero a gomiti C.50		1
23	91.5000.00	Linguetta 12x8x70 UNI 6604		2
24	71.1500.22	Coperchio cuscinetto lato PTO		1
26	90.0606.00	Anello di arresto Ø 20 UNI 7437		6
27	71.0500.15	Guida pistone		3
28	96.7140.00	Rosetta Ø 10x50x1		3
29	71.0407.09	Pistone completo Ø 12		3
	71.0408.02	Pistone completo Ø 14		3
30	97.7430.00	Spinotto Ø 20x38		3
31	90.1678.00	Anello rad. Ø 38x52x7/8.5	C	3
32	96.4160.00	Raccordo a 90° G 1/4"-Ø 10 - GIREVOLE		1
33	71.2235.66	Raccordo strozzato Ø 2.5 1/8"M – 1/4"F		1
34	96.7100.00	Rosetta Ø 10x14x1.5 – ALLUMINIO		1
35	71.1650.20	Distanziale per camicie		1
36	90.3663.00	OR Ø 4x2 (30-20)	A-C	1
37	90.3891.00	OR Ø52,07x2,62 (3206)	A-C	6
38	90.0672.00	Anello 30 UNI 7437		3
39	71.2167.66	Anello per tenuta Ø 12		3
	71.2168.66	Anello per tenuta Ø 14		3
40	90.2588.00	Anello ten. alt. Ø 12x19x6 L.P.	A-C	3
	90.2604.00	Anello ten. alt. Ø 14x22x6 L.P.	A-C	3
41	71.2147.66	Supporto guarnizione Ø 12		3
	71.2148.66	Supporto guarnizione Ø 14		3
43	71.2113.70	Bussola guarnizione Ø 12	A-C	3
	71.2114.70	Bussola guarnizione Ø 14	A-C	3
44	71.2243.68	Anello antiest. Ø 12	A-C	3
	71.2246.68	Anello antiest. Ø 14	A-C	3
45	71.0600.66	Camicia		3
46	90.3702.00	OR Ø 38x2 (380-20)	A-C	3
47	99.3261.00	Vite M8x100 UNI 4762 – GEOMET		24
48	99.4550.00	Vite M12x260 UNI 4762		8
49	71.1270.56	Testata Ø 12-14		1
50	36.2055.70	Guida valvola	D	3
51	94.7423.00	Molla Ø 13.9x23	D	3
52	36.2056.66	Valvola	D	3
53	93.1865.00	Guarnizione Ø 24x29x3.8	B-C-D	3
54	36.2052.66	Sede valvola Ø 14 - (VK12)	D	3
	36.2102.66	Sede valvola Ø 14	D	3
55	93.1865.00	Guarnizione Ø 24x29x3.8	B-C	3
56	36.2053.66	Valvola piana	D	3
57	94.7518.00	Molla Ø 21.6x37	D	3
58	71.2117.82	Bussola per pistone Ø 12		3
	71.2118.82	Bussola per pistone Ø 14		3
59	90.2590.00	Anello ten. alt. Ø 12x24x11 H.P.	A-C	3
	90.2606.00	Anello ten. alt. Ø 14x24x11.1 H.P.	A-C	3
60	99.1944.00	Vite M6x40 UNI 4762 – GEOMET		30
61	72.2107.84	Guarnizione scatola riduttore	C	1
62	97.6185.00	Spina cilindrica Ø 8x18 UNI 1707		1
63	72.2108.20	Scatola riduttore		1
64	97.6152.00	Spina cilindrica Ø 5x10 UNI 1707		2
65	90.3948.00	OR Ø 209.22x2.62 (3825)	C	1
67	10.0713.35	Corona Z40 – 2200 - Elicoidale		1
	10.0712.35	Corona Z37 – 1800 - Elicoidale		1
	10.0711.35	Corona Z34 – 1500 - Elicoidale		1
68	72.2110.55	Rondella fissaggio corona		1
69	99.4307.00	Vite M12x40 UNI 5737		1
70	91.8577.00	Cuscinetto a sfere 45x100x25 6309		1
71	10.0710.35	Pignone Z22 - 2200 – Elicoidale		1
	10.0709.35	Pignone Z25 - 1800 – Elicoidale		1
	10.0708.35	Pignone Z27 - 1500 – Elicoidale		1
72	91.8293.00	Cuscinetto a sfere 50x110x27 6310		1
73	72.2109.20	Coperchio scatola riduttore		1
74	99.3146.00	Vite M8x50 UNI 5931		16
75	97.5940.00	Spia livello olio G 1/2"		1
76	90.1700.00	Anello rad. Ø 50x65x8	C	1
77	71.0307.01	Biella - Completa		3
78	90.3585.00	OR Ø 10.82x1.78 (2043)	C	2
79	98.2047.00	Tappo G 1/4"x13 – NICKEL		2
80	71.2258.51	Tappo carter		6
81	71.2259.51	Cappuccio tappo carter		3
82	90.9243.00	Semiboccola testa biella – Inf.	E	3
	90.9244.00	Semiboccola testa biella +0.25 – Inf.	E	3
	90.9245.00	Semiboccola testa biella +0.50 – Inf.	E	3
83	90.9240.00	Semiboccola testa biella – Sup.	E	3
	90.9241.00	Semiboccola testa biella +0.25 – Sup.	E	3
	90.9242.00	Semiboccola testa biella +0.50 – Sup.	E	3
84	90.9110.00	Boccola piede biella		3

Copyright

Copyright of these operating instructions is property of Interpump Group.
The instructions contain technical descriptions and illustrations which may not be entirely or in part copied nor reproduced electronically nor passed to third parties in any form and in any case without written permission from the owner.

Violators will be prosecuted according to law with appropriate legal action.

Code 72980203 - Cod.IE 2860000079 – 16/04/2010
Data contained in this document may change without notice.

PRATISSOLI a brand of INTERPUMP GROUP SPA
42049 S.ILARIO - REGGIO EMILIA (ITALY)
Tel. ***+39 - 0522 - 904311*** Fax ***+39 - 0522 - 904444***
E-mail: info@pratissolipompe.com
http://www.pratissolipompe.com